8510.**

CYLINDRICAL TERMINALS · FLAGS

For male (mm) Ø 2

Wire size mm² (AWG) 0,75-1,7 (18-16)

Ø Insulation (mm) 2,3-3,3

Materials, temperature and contact resistance

Part nr.	Material	Finishing	Max. Temp. (ºC)
8510.24	Steel	Nickel-plated	300

Material thickness (mm) 0,3

Max. rated current

Wire section	8510.24
0.75 mm²	8A
1.00 mm²	8A
1.50 mm²	10A

Insertion / Withdrawal forces

	8510.24
1st Insertion (max)	40N
1st Withdrawal (max)	30N
6th Withdrawal (min)	10N

Application tool MN8510

Wire strip length 4.0 (±0.3) mm

Crimping parameters & pull out force

Wire section (±10%)	Conductor		Insulator	Pull-out force (N)
	Height (mm)	Width (mm)	Width (mm)	
0.75 mm²	1.30 (±0.05)	2.25 (±0.05)	3.59 (±0.10)	84N @ 60s
1.00 mm²	1.40 (±0.05)	2.27 (±0.05)	3.60 (±0.10)	108N @ 60s
1.50 mm²	1.55 (±0.05)	2.28 (±0.05)	3.62 (±0.10)	150N @ 60s

Values only valid for the application tool specified upwards. The insulator widths are only indicative as they are dependent on the sheath thickness of the wire used.

Winding number 5000

Approvals

RoHS

8510.**

CYLINDRICAL TERMINALS · FLAGS

Drawing

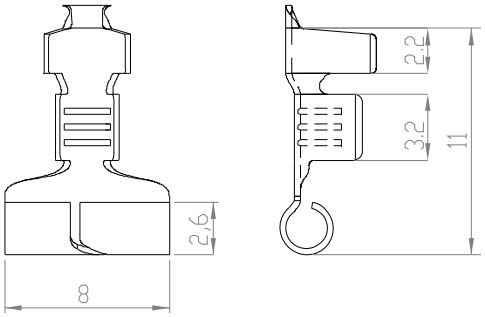

Disclaimer

Data obtained from Escubedo Laboratory essays, using own methodology, cablings, equipment and original crimping tools, done in laboratory conditions and following the indicated standards, errors and omissions excepted. This document has no contractual meaning and it is publicised only for informative purposes. It can be changed without prior notice. The end customer has the sole responsibility to check these characteristics in its environment and with its own components, manufacturing methods and equipment. See also the full range product overview if available. For further information please visit our web site or contact us

Rev. Nr.	Concept	Date	Created/Revised	Approved
A4	Change company name and logo	2021-10-21	M.Codina (Engineering dept.)	E.Roura (Laboratory dept.)
A3	1st Insertion Force for steel updated	2021-01-18	M.Codina (Engineering dept.)	E.Roura (Laboratory dept.)
A2	Update Image	2019-12-03	M.Codina (Engineering Dept.)	E.Roura (Laboratory Dept.)
A1	Datasheet created automatically [A1]	2019-09-24	E. Roura (Laboratory Dept.)	M. Codina (Engineering Dept.)

Escubedo Connection Systems, S.A.U. · Ctra. de Girona-Olot Km. 35,5 · 17843 Riudellots de la Creu · Girona · Spain
Tel.: 34 972 171 706 · Fax: +34 972 171 714 · info@escubedo.com · www.escubedo.com