4920.**

6.3 (.250) TYPE SERIES · RECEPTACLES

SELF-LOCKING RECEPTACLES. LOW INSERTION TERMINALS.

Specification Self-locking terminals under TP design

For male (mm) 6,3x0,8

Wire size mm² (AWG) 0,5-1 (20-18)

Ø Insulation (mm) 1,8-2,5

Materials, temperature and contact resistance

Part nr.	Material	Finishing	Max. Temp. (ºC)
4920.00	Brass	Natural	110
4920.01	Brass	Pre-tin-plated	120
4920.30	Bronze	Natural	120
4920.31	Bronze	Pre-tin-plated	130
4920.70	German Silver	Natural	210

Material thickness (mm) 0,4

Max. rated current

Wire section	4920.00 / 01 / 30 / 31 / 70
0.50 mm²	8A
0.75 mm²	10A
1.00 mm²	12A

Insertion / Withdrawal forces

	4920.00 / 01 / 30 / 31 / 70
1st Insertion (max)	25N[1]
1st Withdrawal (max, locking disenabled)	25N[1]
1st Withdrawal (min, locking enabled)	50N[1]

[1] Valid for Natural Brass Tab

Secutiry function The self-locking function prevents disconnection by pulling the cable.
Disconnection is possible by disabling the locking function, moving the lever up manually or by sliding the connector (see extraction forces).
It allows several connections-disconnections while maintaining the functional characteristics.

Application tool MN4920

Wire strip length 5.5 (±0.5) mm

Crimping parameters & pull out force

Wire section (±10%)	Conductor		Insulator	Pull-out force (N)
	Height (mm)	Width (mm)	Width (mm)	
0.50 mm²	1.30 (±0.05)	2.37 (±0.05)	3.47 (±0.10)	56N @ 60s
0.75 mm²	1.40 (±0.05)	2.37 (±0.05)	3.47 (±0.10)	84N @ 60s
1.00 mm²	1.50 (±0.05)	2.38 (±0.05)	3.47 (±0.10)	108N @ 60s

Values only valid for the application tool specified upwards. The insulator widths are only indicative as they are dependent on the sheath thickness of the wire used.

Winding number 8000

Compatible connectors 26319**, P5495**

4920.**

6.3 (.250) TYPE SERIES · RECEPTACLES

SELF-LOCKING RECEPTACLES. LOW INSERTION TERMINALS.

Approved regulations

Part nr.	Approval	Standard	File	Certified framework
4920.00	UL	UL 310	E211727	AWG 20-18 (10-16 Stranded Cu) / MN4920
4920.01	UL	UL 310	E211727	AWG 20-18 (10-16 Stranded Cu) / MN4920

Approvals

Drawing

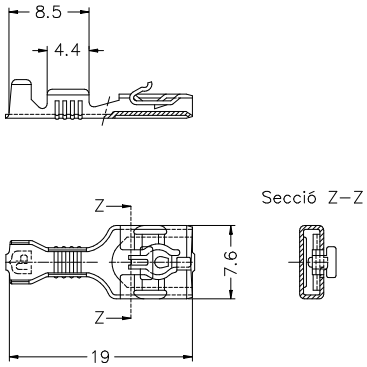

Disclaimer

Data obtained from Escubedo Laboratory essays, using own methodology, cablings, equipment and original crimping tools, done in laboratory conditions and following the indicated standards, errors and omissions excepted. This document has no contractual meaning and it is publicised only for informative purposes. It can be changed without prior notice. The end customer has the sole responsibility to check these characteristics in its environment and with its own components, manufacturing methods and equipment. See also the full range product overview if available. For further information please visit our web site or contact us

Rev. Nr.	Concept	Date	Created/Revised	Approved
A2	Change company name and logo	2021-10-21	Laboratory Dept. (E. Roura)	Engineering Dept. (M. Codina)
A1	Datasheet updated automatically [A1]	2021-01-28	Laboratory Dept. (E. Roura)	Engineering Dept. (M. Codina)

Escubedo Connection Systems, S.A.U. · Ctra. de Girona-Olot Km. 35,5 · 17843 Riudellots de la Creu · Girona · Spain
Tel.: 34 972 171 706 · Fax: +34 972 171 714 · info@escubedo.com · www.escubedo.com